WaterRower

WRPS000
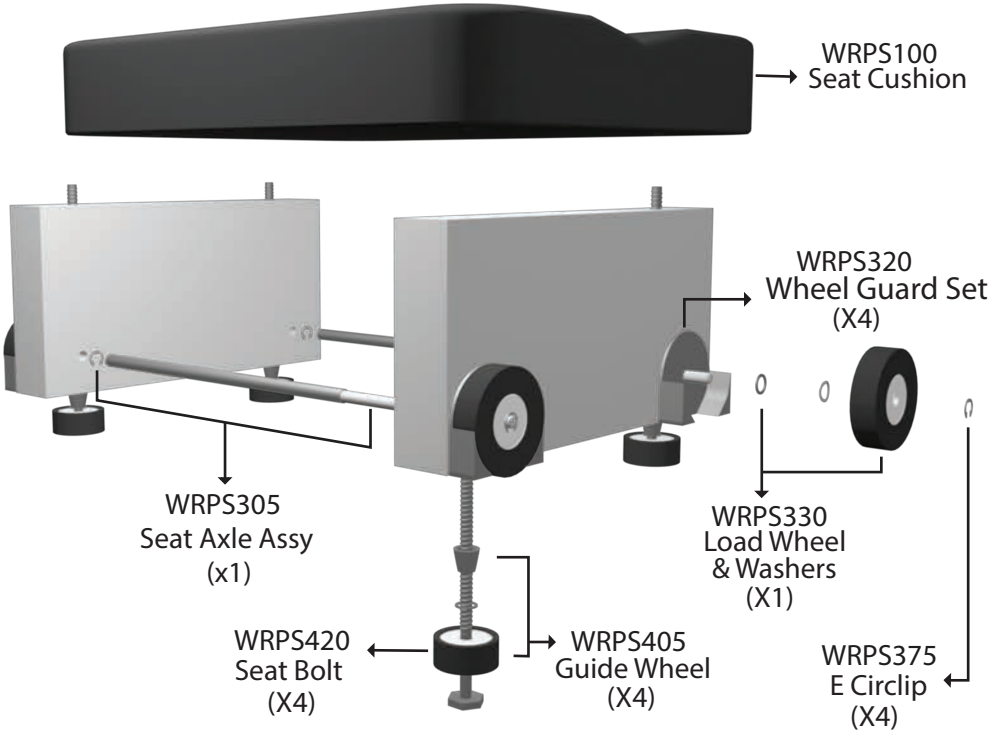
S4 SEAT ASSEMBLY